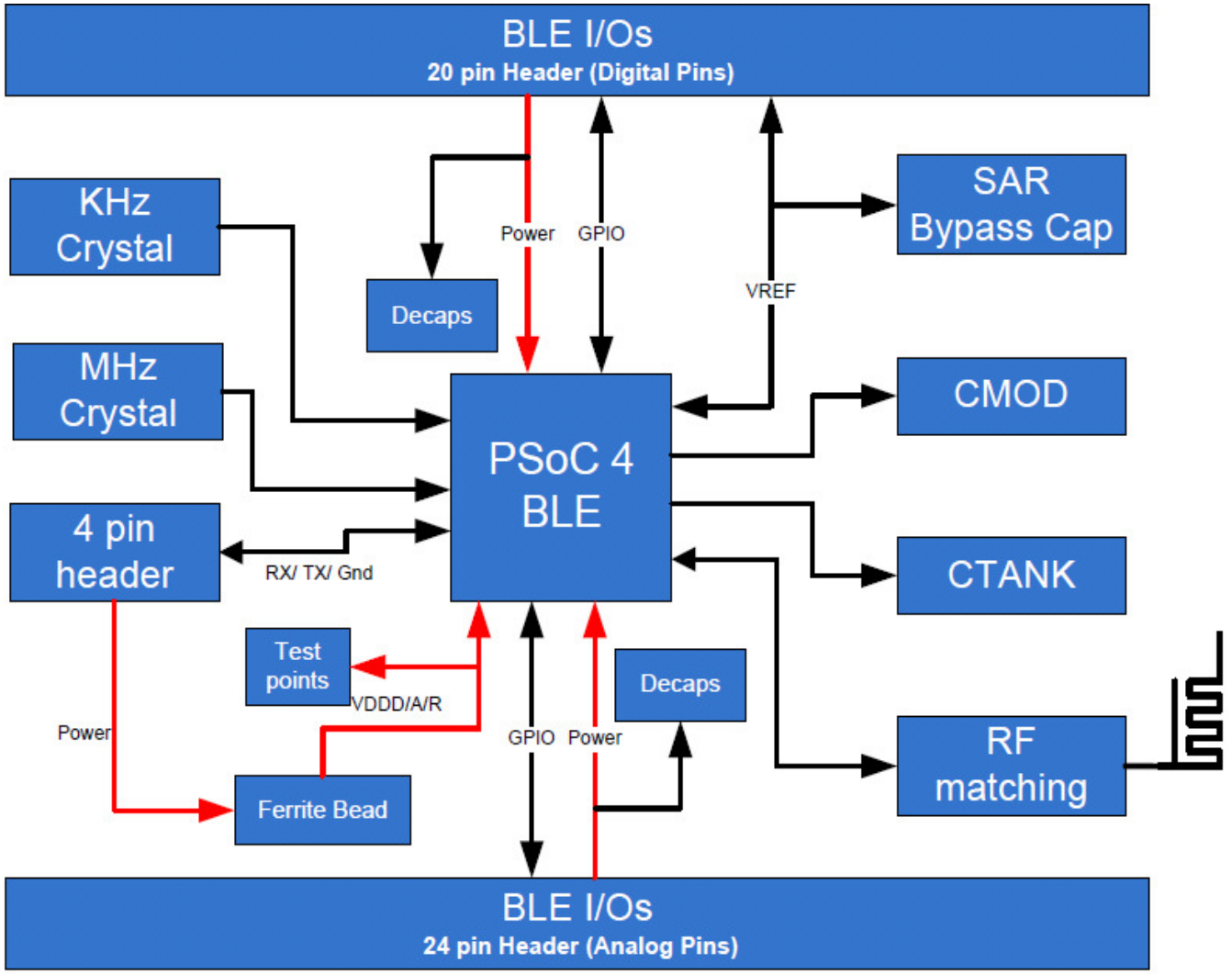

PCA: 121-60215-01
PCB: 600-60248-01
FAB DRW: 610-60240-01
ASSY DRW: 620-60248-01

CYPRESS SEMICONDUCTOR © 2015

Title: CY8CKIT-143 PSoC 4 BLE 256K Module		
Size: A	Document Number: 630-60247-01	Rev: 01
Date: Tuesday April 28, 2015	Sheet 1 of 2	

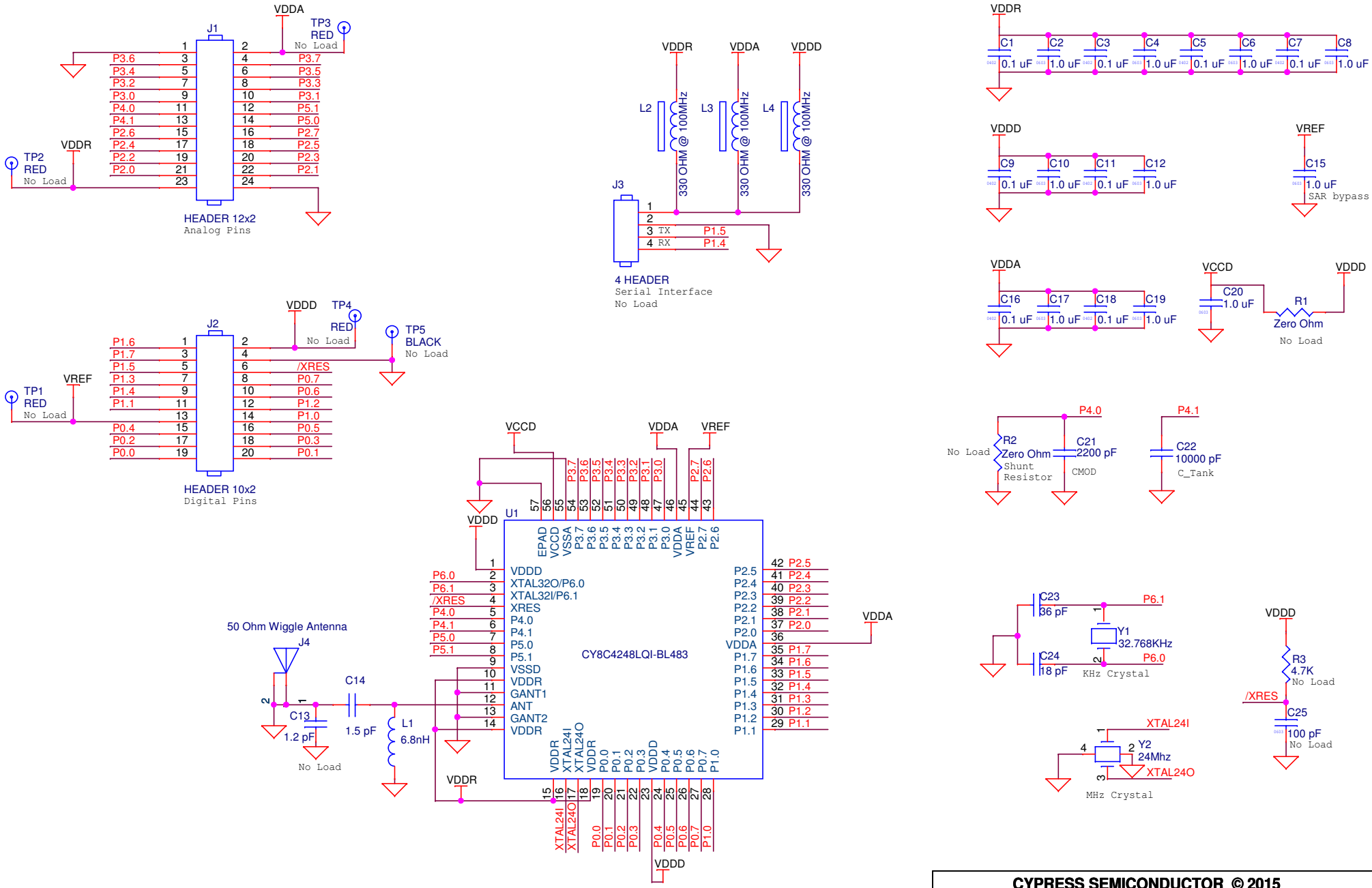

PCA: 121-60215-01
PCB: 600-60248-01
FAB DRW: 610-60240-01
ASSY DRW: 620-60248-01

CYPRESS SEMICONDUCTOR © 2015

Title	CY8CKIT-143 PSoC 4 BLE 256K Module	
Size A4	Document Number 630-60247-01	Rev 01
Date: Tuesday April 28, 2015	Sheet 2 of 2	